SPECIFICATION APPLIED

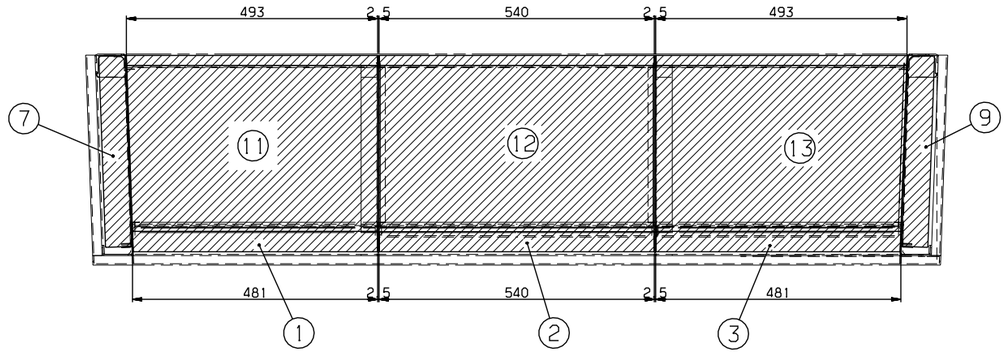

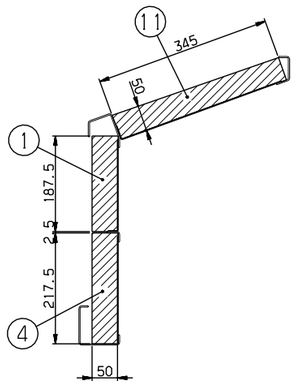

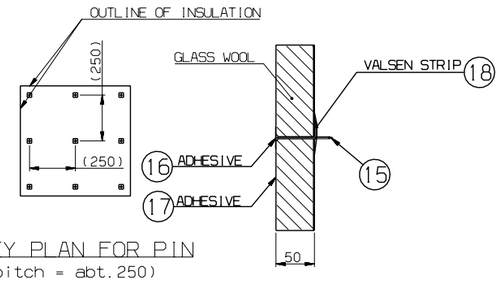

KEY PLAN FOR PIN
(pitch = abt.250)

SECTION OF GLASS WOOL

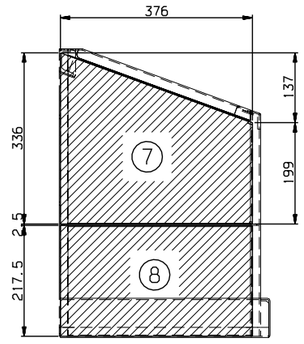

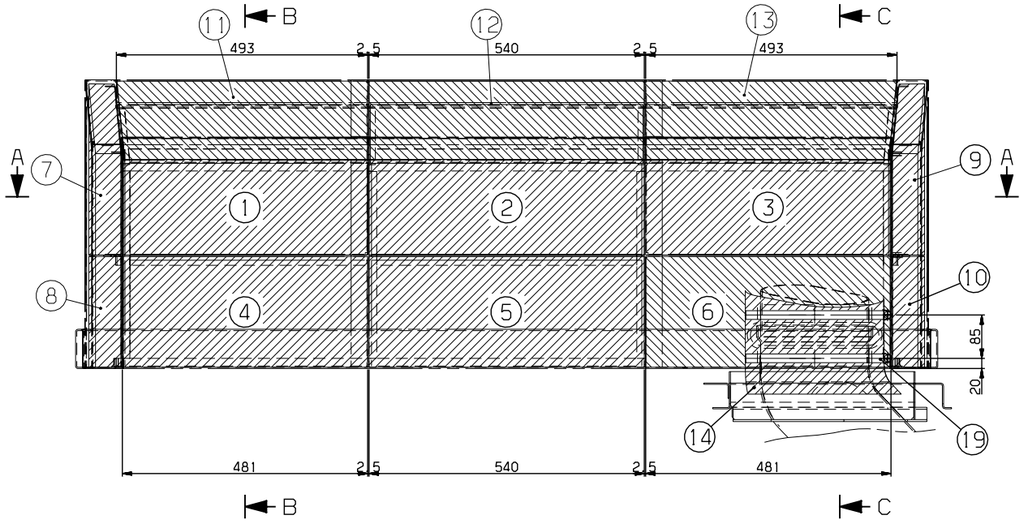

SECTION B-B

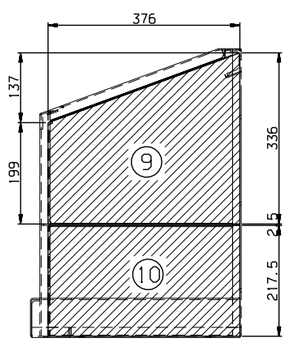

NOTE
1. THE GLASS_WOOL SHALL BE MANUFACTURED AFTER BEING APPROVED BY A SAMPLE
2. THE 5 FACES OF GLASSWOOL SHALL BE PACKED WITH ALUMINUM AND APPROVED BY AN INSPECTOR.
   THE UNPACKED 1 FACE OF THE GLASS WOOL SHALL BE INSTALLED TOWARD THE DIRECTION OF CARBODY'S OUTER PLATE
3. THE SURFACE OF ADHESIVE SHOULD BE REMOVED DUST, OIL AND DEBRIS BEFORE THE GLASS WOOL IS INSTALLED
4. CUTTING TOLERANCE SHOULD BE CARRIED +5 ~ +10mm
5. GLASS_WOOL DENSITY SHELL BE SATISFIED WITH THE VALUE 48Kg/m³ (BY THE PART STANDARD)
6. THE GLASS_WOOL SHOULD BE APPROPRIATELY CUT TO THE VEHICLE WHEN IT IS INTERFERED WITH FRAMES
7. ITS CUTTING DIMENSION AND PART QUANTITY SHALL BE DECIDED AFTER PRODUCED BY GLASS_WOOL INSTALLATION OF THE FIRST VEHICLE
8. THE MANUFACTURER SHOULD PROCURE THE GLASS WOOL WITH PART NUMBER ON GLASS WOOL UPPER FACE
9. ADHESIVE AND VALSEN STRIP SHALL BE COMPLIED THE FOLLOWINGS
   1) THE GLASSWOOL SHALL BE INSTALLED WITH "D5250NFSP" OR OTHER EQUIVALENT-QUALITY ADHESIVE
   2) THE GLASSWOOL PIN(NO.246) SHALL BE INSTALLED ON THE CARBODY STRUCTURES WITH PART NO.#16.
10. THE VALSEN STRIP SHALL BE APPLIED TO ALL OF THE CONTACTS WITH CARBODY. THE CUTTING SECTION OF GLASS WOOL, THE PLACES OF PIN INSTALLATION.
11. AFTER CUTTING AND PROCESSING THE INSULATION APPLY THE VALSEN STRIP AND SEAL THE GAPS.
12. AFTER BENDING THE PIN, APPLY THE VALSEN STRIP AND SEAL PINS.
13. THE INSULATION SHALL BE INSTALLED BEING SPREAD WITH BONDAGE AND FINISHED WITH AL TAPE ON THE PLACES WHERE THE PINS CANNOT BE APPLIED
14. THE PIN INSTALLATION INTERVAL SHALL BE EQUALLY ARRANGED ACCORDING TO THE KEY PLAN BASE.
15. PIN PATCH INTERVAL SHALL BE 250mm WHEN INSTALLING THE GLASSWOOL PIN.

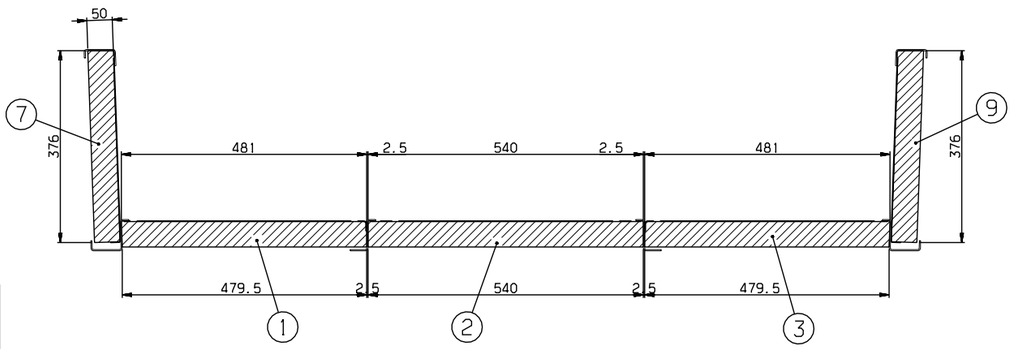

SECTION A-A

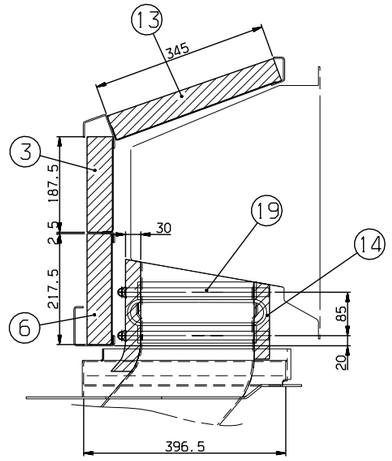

SECTION C-C

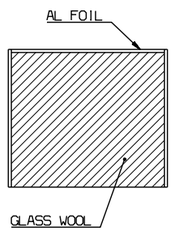

SECTION INSULATION

19	CP670002-443	CLAMP,HOSE	ASSY	2		FOR OD=20*(458-508mm)
18	RFP40101EJ0-018	VALSEN STRIP	ASSY	1		
17	CP910004-411	ADHESIVE	ASSY	1		D-5250NF(SP),AR
16	CP910004-410	ADHESIVE,SEVEN RESIN	ASSY	1		AR
15	RFP40005AN0	PIN,GLASS WOOL	ASSY	1		
14	RFP40101EJ0-014	INSULATION	PE-FOAM	1		T30x240x1200 CELLOFOAM D2600.Siyah
13	RFP40101EJ0-013	INSULATION	GLASS_WOOL	1		T50
12	RFP40101EJ0-012	INSULATION	GLASS_WOOL	1		T50
11	RFP40101EJ0-011	INSULATION	GLASS_WOOL	1		T50x540x345
10	RFP40101EJ0-010	INSULATION	PE-FOAM	1		T50x376x217.5 CELLOFOAM D2600.Siyah
9	RFP40101EJ0-009	INSULATION	GLASS_WOOL	1		T50
8	RFP40101EJ0-008	INSULATION	GLASS_WOOL	1		T50x376x217.5
7	RFP40101EJ0-007	INSULATION	GLASS_WOOL	1		T50
6	RFP40101EJ0-006	INSULATION	PE-FOAM	1		T50 CELLOFOAM D2600.Siyah
5	RFP40101EJ0-005	INSULATION	GLASS_WOOL	1		T50x540x217.5
4	RFP40101EJ0-004	INSULATION	GLASS_WOOL	1		T50
3	RFP40101EJ0-003	INSULATION	GLASS_WOOL	1		T50
2	RFP40101EJ0-002	INSULATION	GLASS_WOOL	1		T50x540x187.5
1	RFP40101EJ0-001	INSULATION	GLASS_WOOL	1		T50

품번 NO.	부품 번호 PART NO.	품명 DESCRIPTION	재질 MATERIAL	수량 Q'TY	중량 W.T	비고 REMARKS

승인 APP	JeongYul Lee 2014.10.27	재질 MAT'L	ASSY	미수 TITLE	INSULATION,ENGINE FILTER
검토 CHK	KeongBong Park 2014.10.27	중량중 G.W			
설계 DGN	HeonUk Lee 2014.10.27	일정관리 MC / WD / CT	B / B / B	도면 번호 DRG. NO	RFP40101EJ0 Ver. 00 Rev. --
제도 DRG	HeeSook Jeong 2014.10.27	SIZE	A1	SCALE 1/6	매수 SHEET 1 of 1

HYUNDAI Rotem 현대로템주식회사

RSD1402 / RFP- / 넌-PRJT / 참리본품 / CATIA

기호 MARK	일자 DATE	변경내역 DETAIL OF REVISION(E.C ZONE)	설변번호 E.C NO.	설계 DGN	검도 CHK	승인 APP

본 도면은 당사 재산권과 기술이며 무단복사/배포 금지됩니다. PROPERTY OF ISSUING ENTITY, CANNOT BE DISTRIBUTED OR REPRODUCED WITHOUT AUTHORIZATION.

일반공차 GENERAL TOLERANCE			
구분	구분	A	B
일반 GENERAL	~ 40	2	4
	~ 30	2	3
	~ 10	1	1.5
홀	< 3	0.5	1
절삭 MACHINING	~ 3150	-	7
	~ 1600	4	5
	~ 800	3	4
	~ 400	2	3
	~ 200	1.5	2
	~ 100	1	1.5

등급 GRADE	A	B
주조 CASTING 구분	(±)	
~ 20M	9	14
~ 15M	7	12
~ 12M	6	10
~ 8M	5	8
~ 4M	4	6
~ 2M	3	4
~ 1M	2	3
~ 315	1	2
~ 120	1	2
~ 30	1	1

등급 GRADE	A	B	C
용접 WELDING 구분	(±)		
~ 20M	-	6.0	8.0
~ 15M	-	5.0	7.0
~ 12M	-	4.0	6.0
~ 8M	-	3.0	5.0
~ 4M	0.8	2.0	4.0
~ 2M	0.5	1.2	3.0
~ 1M	0.3	0.8	2.0
~ 315	0.2	0.5	1.2
~ 120	0.15	0.3	0.8
~ 30	0.1	0.2	0.5
1~6	0.05	0.1	0.2

등급 GRADE	A	B	C
기계 가공품 MACHINING	(±)		
구십사이은 일반공차와 GENERAL TOLERANCE			